Power in a Circuit

For this project you will need to provide:

- Your own multimeter
- A pencil & eraser
- A calculator

Power is Current × Voltage. Power is energy per unit time; current is charge per unit time; voltage is energy per unit charge. So

$$P = I \times V$$

$$\frac{Energy}{time} = \frac{Charge}{time} \times \frac{Energy}{Charge}$$

In this project we will test that by measuring the effect of increasing the voltage (and therefore the current) through a load—in this case an incandescent bulb.

Connect the series circuit shown, using a variable power supply, bulbs, and two multimeters. Set the power supply to low voltage. Then have your professor check it out to make sure the circuit is correct and to turn on the power.

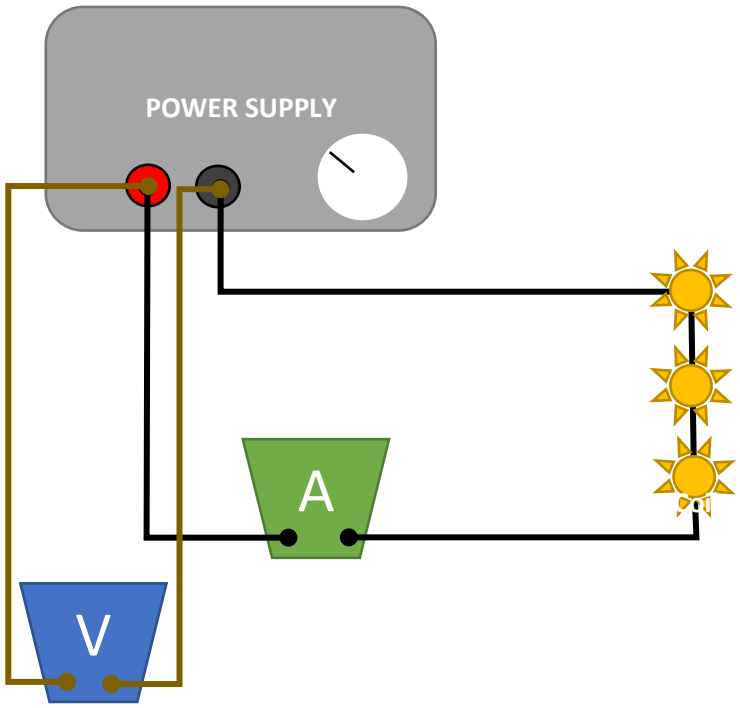

Tape down the wires to the table. Be careful not to touch any exposed parts of the circuit once the power is on.

Once the circuit has checked out and the supply turned on, you will adjust the power supply to several different voltages, and measure voltage (in Volts) and current (in Amps). Also record notes and take pictures of the bulb brightness. For each voltage and current measurement, calculate the power (in Watts) going to the bulbs. See attached data sheet. The different voltages do not need to be at exactly even intervals, but they should be spread out from each other.

Have your instructor turn off the power supply before you proceed further.

Now connect the parallel circuit shown here, using a variable power supply, bulbs, and two multimeters. Set the power supply to low voltage. Then have your professor check it out to make sure the circuit is correct.

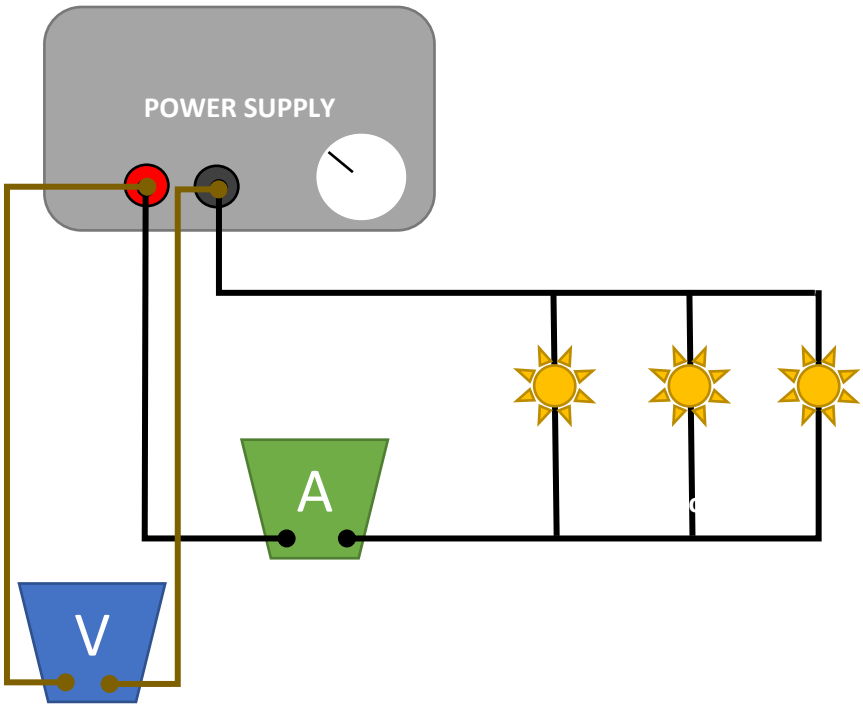

Tape down the wires to the table. Be careful not to touch any exposed parts of the circuit once the power is on.

Once the circuit has checked out and the supply turned on, you will adjust the power supply to several different voltages, and measure voltage (in Volts) and current (in Amps). Also record notes and take pictures of the bulb brightness. For each voltage and current measurement, calculate the power (in Watts) going to the bulbs. See attached data sheet. The different voltages do not need to be at exactly even intervals, but they should be spread out from each other.

For both circuits, plot *Power in Watts* vs. *Voltage in Volts* (see attached graphing sheet). Put both circuit graphs on the same sheet (mark which line on the graph is for which circuit). Mark on the graph the points where the bulbs are doing something interesting (starting to glow, etc.).

In a few of paragraphs (typed, with proper grammar and spelling that befits a college class), discuss the results of your project, along with what problems and successes you had; discuss how the power of each circuit changed; discuss what was similar between the two circuits, and what was the same; be sure to reference your photos.

Turn in the following:

- ✓ Your data sheet
- ✓ Your graphs
- ✓ Your typed paragraphs
- ✓ You photographs

Attach the included cover sheet to the front.

Power in a Circuit (cover sheet)

NAME:_____

(Check off each box) Included in these papers are:

- ❑ My data sheet for this project
- ❑ My graphs for the Series and Parallel circuits
- ❑ My typed paragraphs discussing the results of the project, along with problems and successes, how the power of each circuit changed, what was similar between the two circuits, what was the same.
- ❑ My photographs

NAME:_____

Power in a Circuit – Data Sheet (USE PENCIL)

SERIES				
	Voltage (V)	Current (A)	Power (W)	Bulb Behavior notes
1				
2				
3				
4				
5				
6				
7				
8				

PARALLEL				
	Voltage (V)	Current (A)	Power (W)	Bulb Behavior notes
1				
2				
3				
4				
5				
6				
7				
8				

NAME:_____

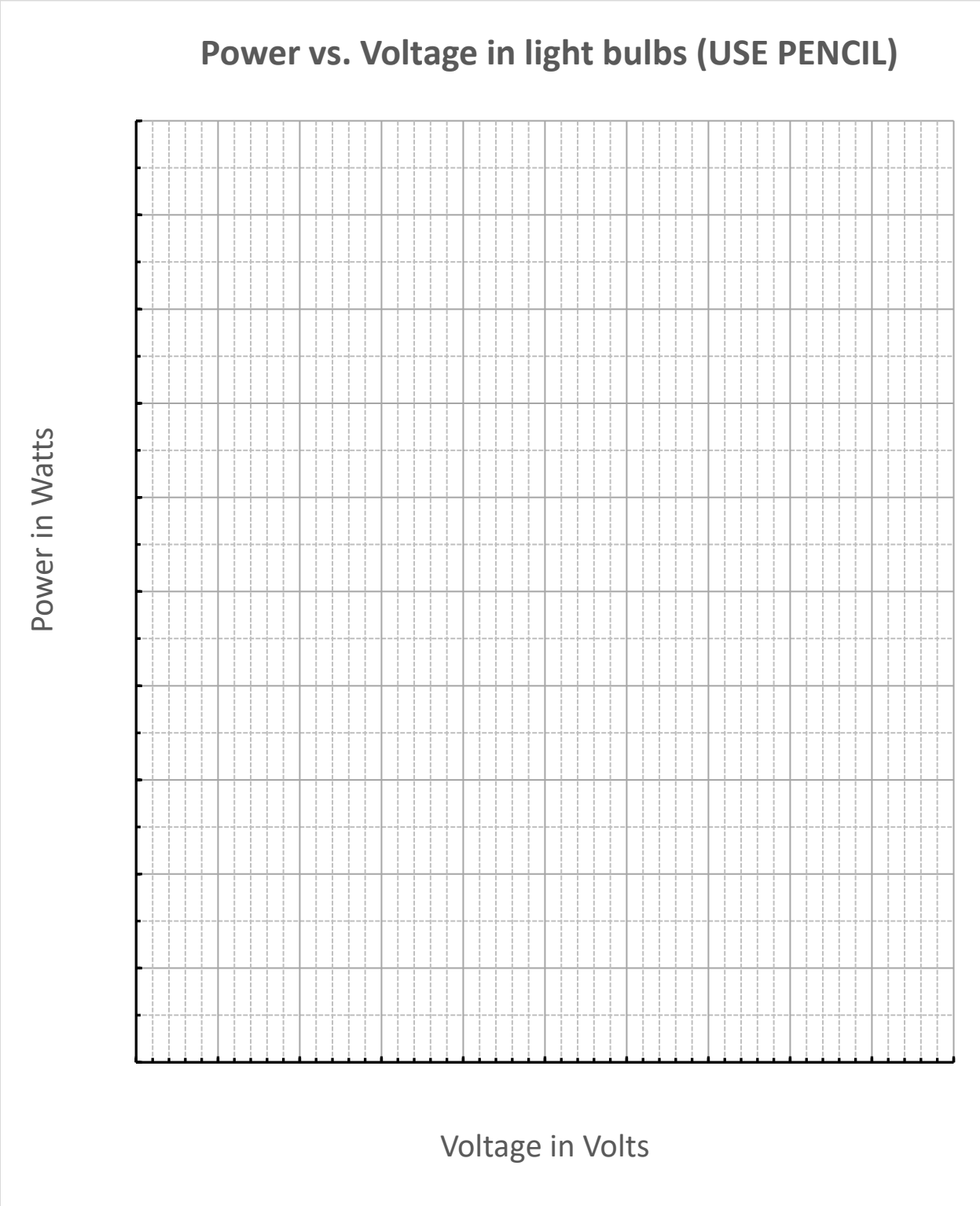
Power vs. Voltage in light bulbs (USE PENCIL)
Power in Watts
Voltage in Volts